HIDDEN LEG TUB DRAIN

Cat. No.

5599HD

BARCLAY

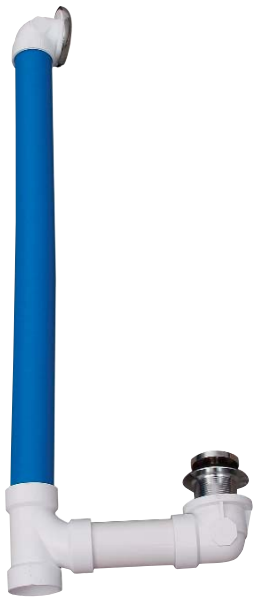

Features:

- ►Available with 24” or 36” tubing
- ►Flexible tubing runs between tub walls
- ►Soft touch stopper
- ►Pop-up assembly is brass
- ►Between tub wall installation saves space
- ►Available in 5 finishes

Finishes:

BN Brushed Nickel
CP Polished Chrome
ORB Oil Rubbed Bronze
PB Polished Brass
PN Polished Nickel

This drain can ONLY be used with the following tubs WITHOUT integral drain:

Onyx, Ogden, Orrick, Opus, Pan, Penney, Pilar, Saville, Saxton

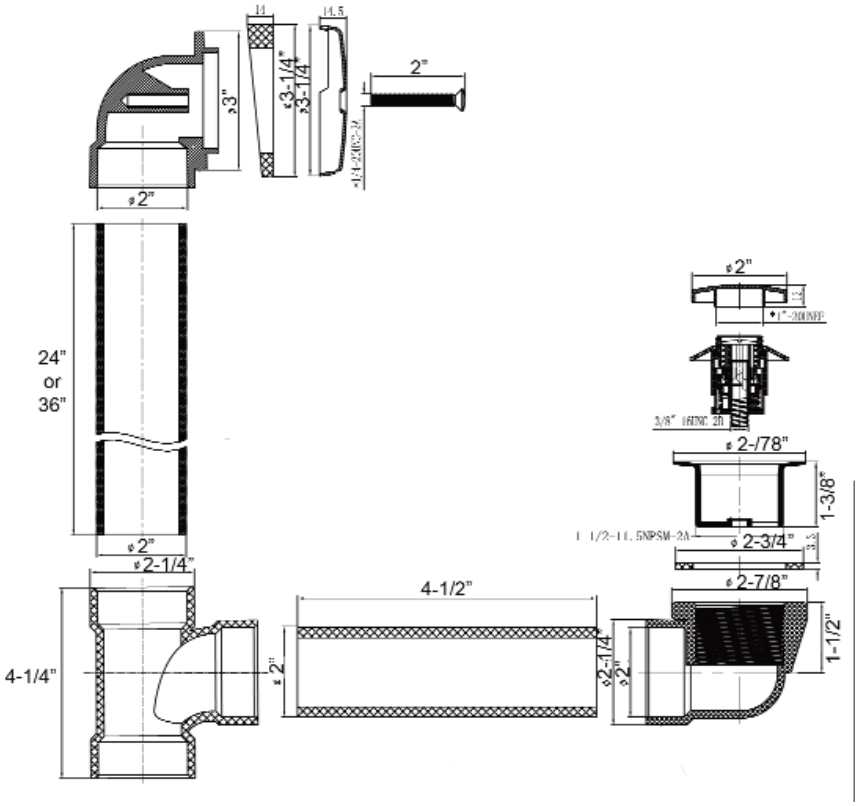

Dimensions and specifications subject to change without notice.